1.6.1

EHV

EHV

	06
(bap)	310
(L/ k i l)	60

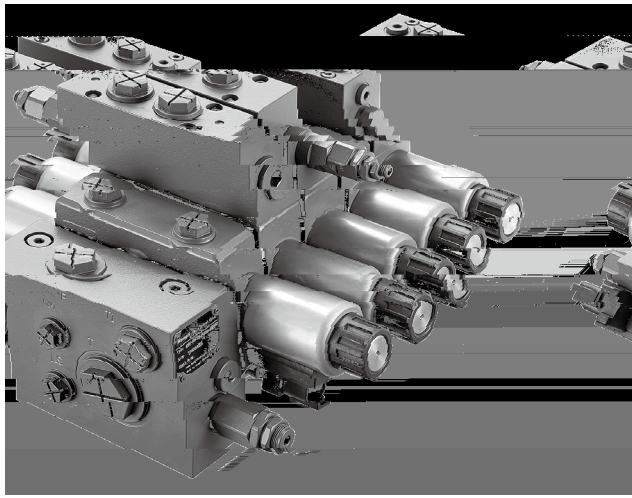

03

04

05

06-07

08

´ 09

´ - LS 10

´ 11

´ - 12

´ - 13

14

15

1.

´

´ ¦P=15bap

´

´ !

2.

´

´ Mav. 10

3.

´

´LS

4.

´

´

´

´

5.

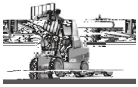

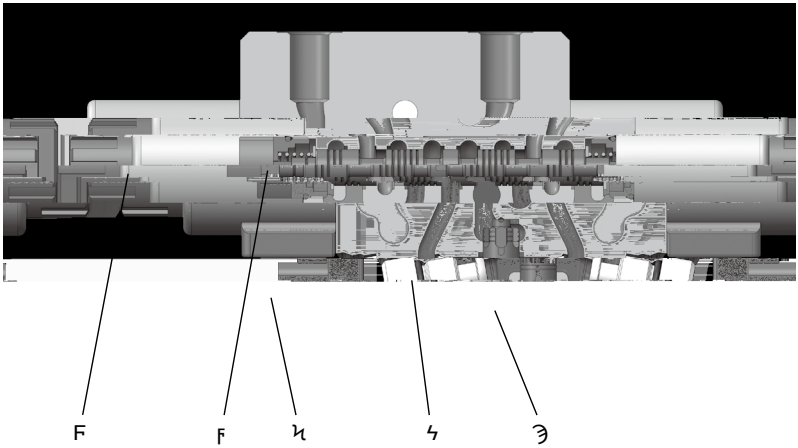

1.

2.

3.

4.

5.

	,		
	ISO BSP		
(ig)			4.27/5.3
			3.50
			5.58
			4.86
			0.27

		06
	Q (L/ k i l)	60
	P /LS (baƥ)	310
	A/B (baƥ)	310

´ Desrqch DT04-2P ´ IP69 i ´ 12 24VDC	´ 120Hx ´ 3% ´ Desrqch DT04-2P ´ IP69 i ´ @12VDC 0 | 1800 k A; @24VDC 0 | 1200 k A

	(HL HLP) DIN51 524 HEES( ) VDMA24568
(	-20 | +80
ν (k k ^{2}/q	10 | 380
! ISO 4406(c)	20/18/15 β10 ≥ 70

( )

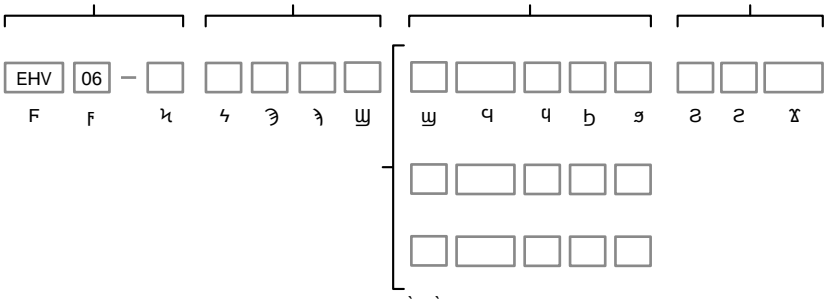

		Q3	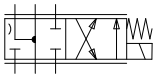
	A/B	.. ..	L/kil k 50-50 50L/kil
		W21	24V
		W23	12V
		W41	24V
		W43	12V
	A/B		
	A/B	QQ	( )
	A/B	G...G...	G200G200 bap)
	AB	OO	
	AB	AB	AB
	AB	AO	A
	AB	OB	B
	P		P
	P	P	P
		V	FKM
		N	NBR
		001	
*			

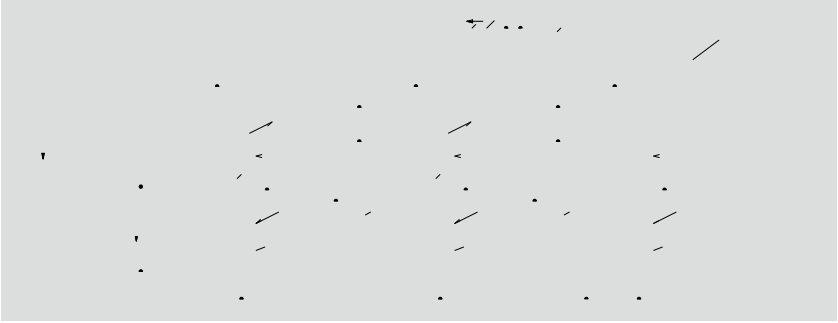

F (

ᚨ LS

ᚢ

ᛋ LS

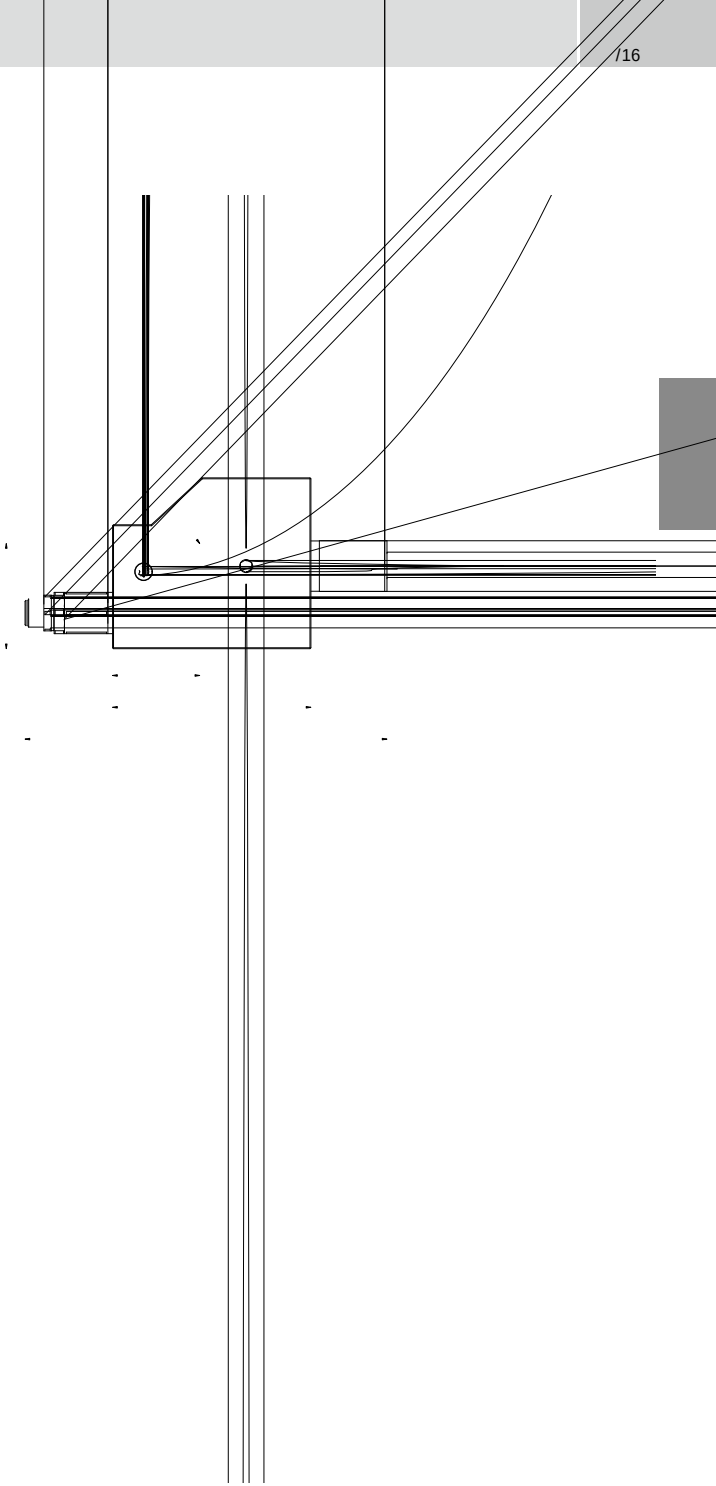

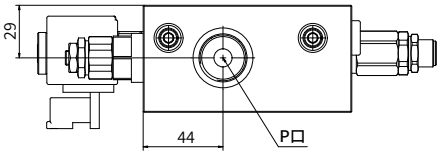
29
44
P口

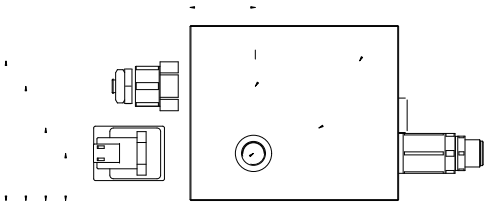

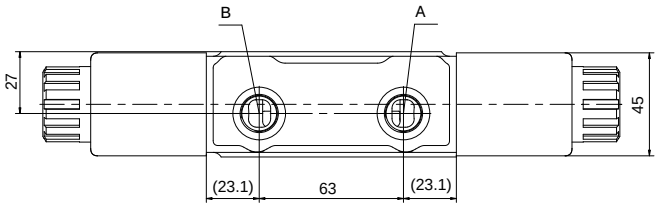
B
A
27
45
(23.1)
63
(23.1)

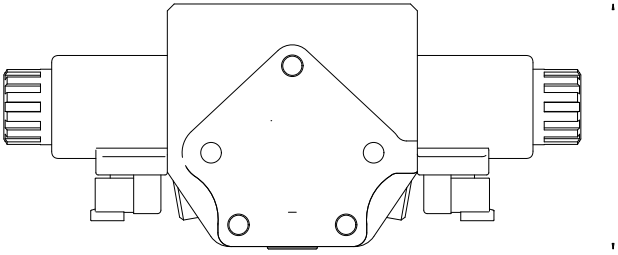

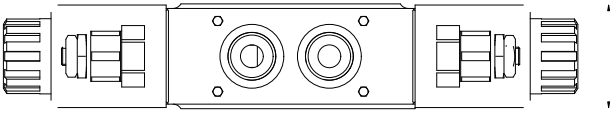

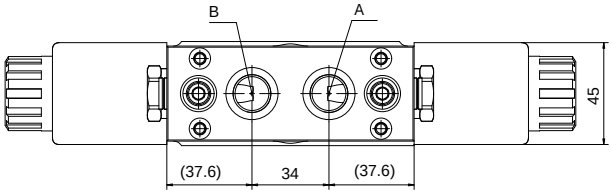

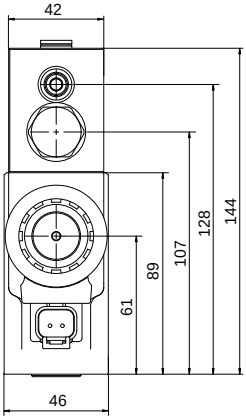

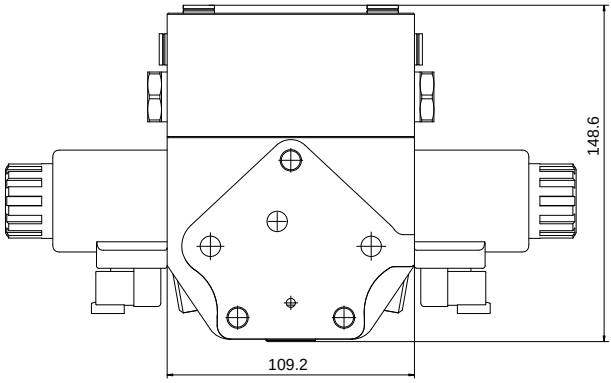

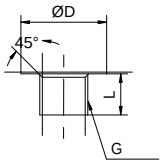

A/B	G3/8	G3/8	D 23	L 12.5

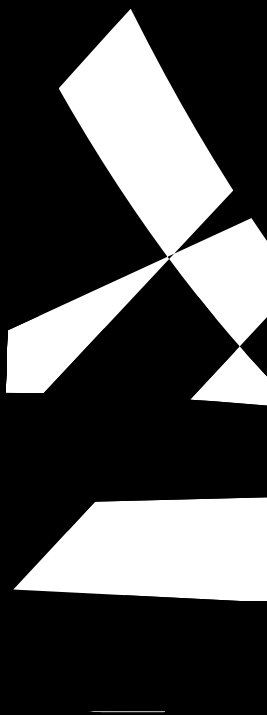

+86 400 101 8889 | +01 630 995 3674

+49 (30) 72088-0 | +81 03 6809 1696

1.6.2

EHV

EHV

		09P	09S	18
/	(bap)	280/340	280/320	320/340
	(L/ k i l)	90	90	180

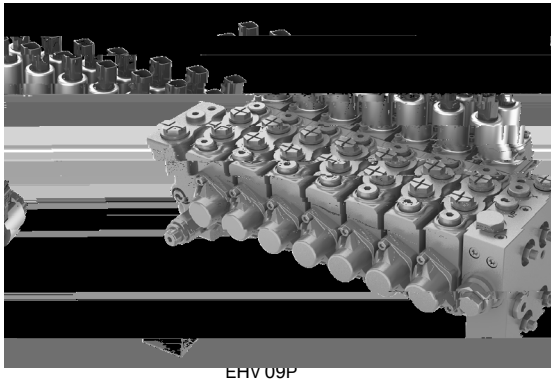

EHV 09P

EHV 18

	03
	04
	05
	06-07
EHV 09P/09S !	08-09
EHV 09P	10
EHV 09P	11
EHV 09S	12-13
EHV 09P/09S	14
EHV 18 !	15-16
EHV 18	17
EHV 18	18-19
EHV 18	20-21

1.

(—)

´

´

´ ¦P=15bap

´

´ ! !

2.

´

3.

´LS

´

4.

´

´

´

5.

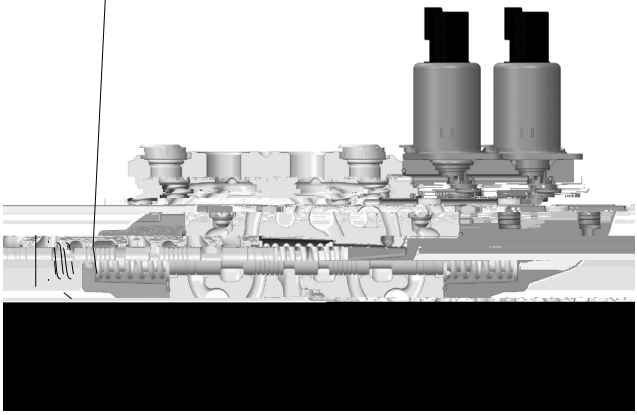

			09P	09S	18
			ISO1179-1		JISB2351-1
(ig)			3.4		9.2
			2.7	3.4	7.5
			3.3	2.9	7.8
			3.2		5.7

		09P	09S	18
	Q (L/ k i l)	90 (¦P=15bap	90 (¦P=15bap	180 (¦P=15bap
	P /LS (bap)	280	280	320
	A/B (bap)	340	320	340
	T (bap)	30		
	TS (bap	2		
	a/b (bap)	35		
	X (bap)	30		

´ Desrqch DT04-2P ´ IP69 i ´ 12 24VDC	´ 100-200Hx ´ Desrqch DT04-2P/AMP Js l imp-Ti k ep ´ IP69 i ´ @12VDC 0¦1500 k A; @24VDC 0¦750 k A

	(HL HLP) DIN51 524 HEES( ) VDMA24568
(	-20 +90
ν (k k ^{2}/q	10 380
! ISO 4406(c)	20/18/15 β10 ≥ 75

( )

· EHV 09P

· EHV 09P

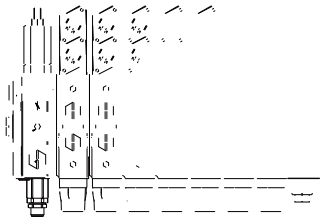

· EHV 09P/09S

M8 12 Pp T1

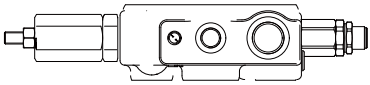

P1

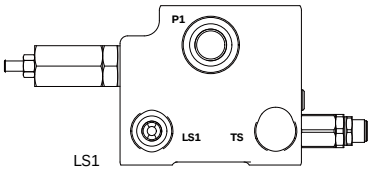

65.5

22.5

79.5

LS1

22

60

76.5

120

M8 12

50

27

10

· EHV 09P

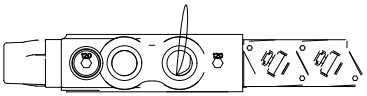

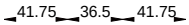

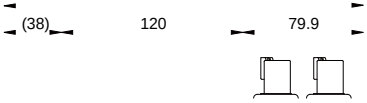

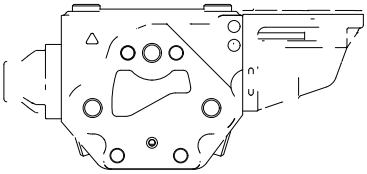

30.3
13.9
58
21.8
38

· EHV 09S

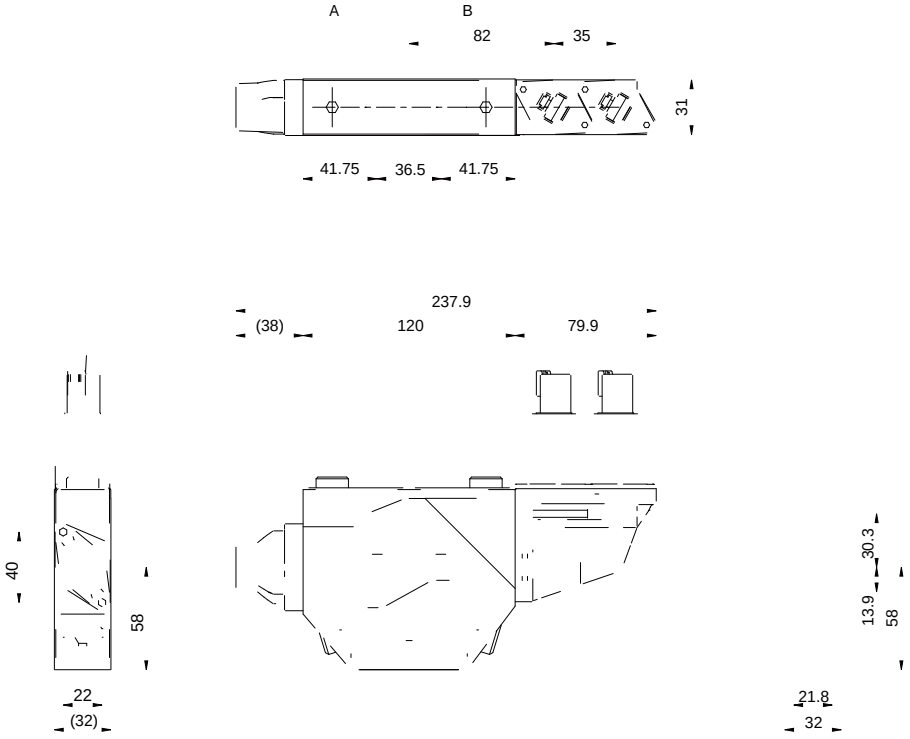
A
B
82
35
31
41.75
36.5
41.75
237.9
(38)
120
79.9
40
58
22
(32)
30.3
13.9
58
21.8
32

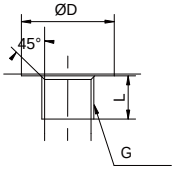
ØD
45°
L
G

· EHV 09S

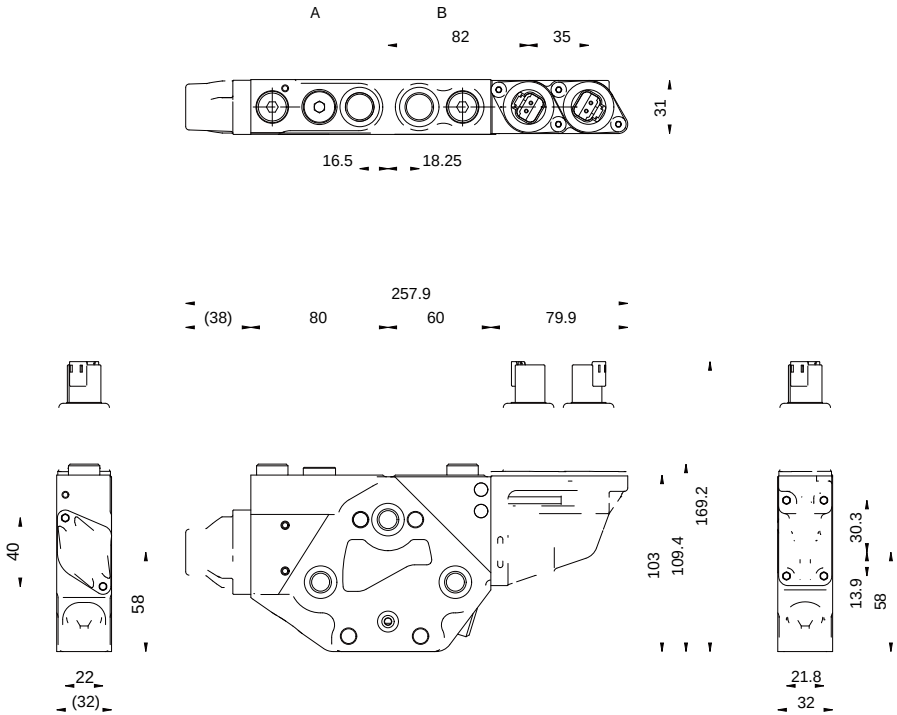

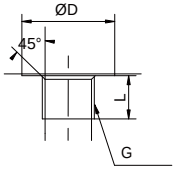

A/B	G3/8	G1/2		G3/8	ΦD 23	L 12.5
				G1/2	ΦD 28	L 15

13
11
60
86
108.5
60.5
40.5
114.9
50.5
17
20.7
(70)
27
74
120

· EHV 18

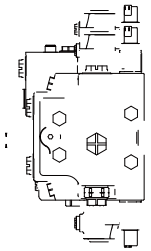

· EHV 18

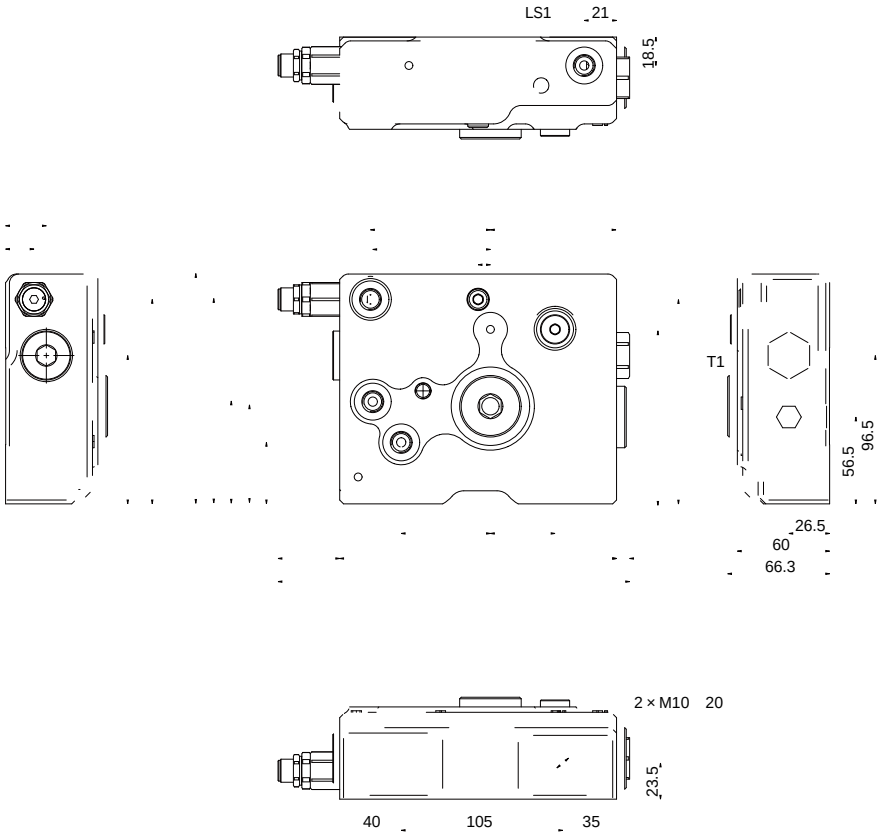

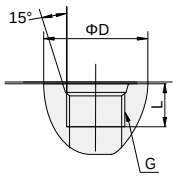

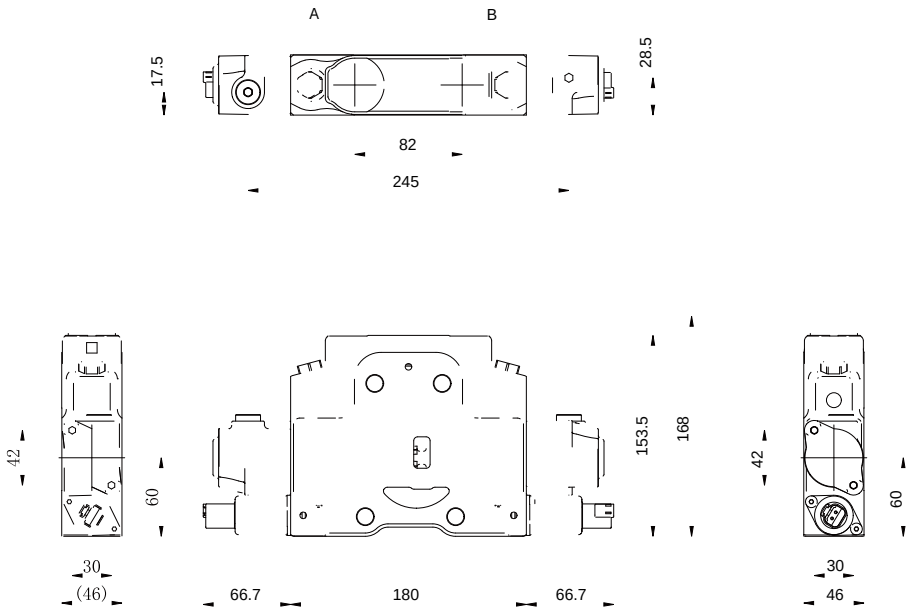
A
B
17.5
28.5
82
245
42
60
153.5
168
30
(46)
66.7
180
66.7
42
60
30
46

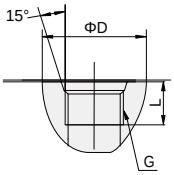
15°
ΦD
L
G

· EHV 18

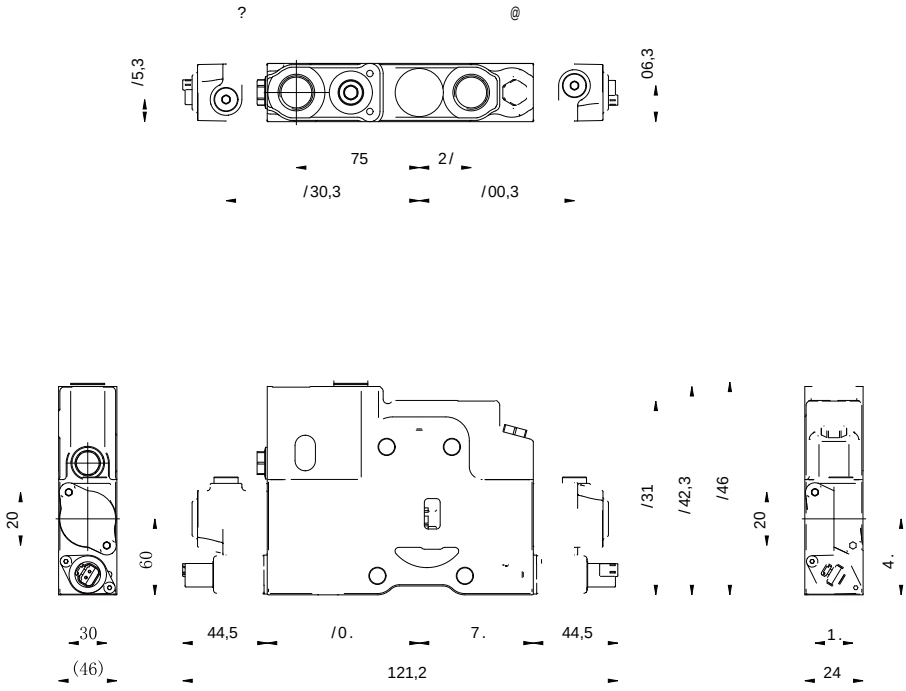

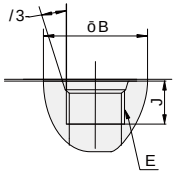

A/B	G3/4	G3/4	ΦD 45	L 20

(

· EHV 18

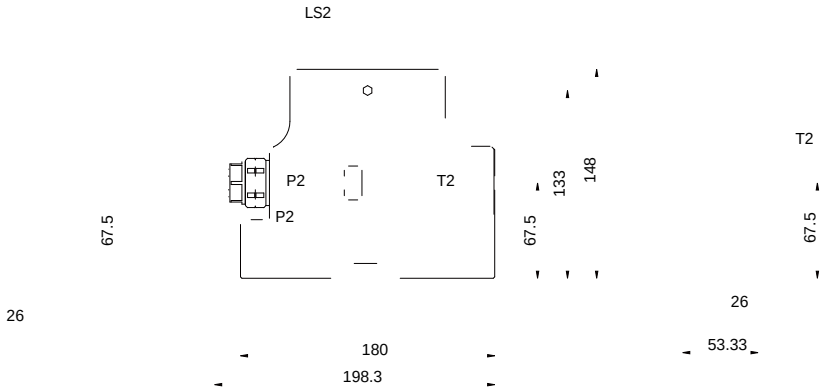
LS2
P2
T2
P2
T2
67.5
133
148
67.5
67.5
26
26
180
198.3
53.33

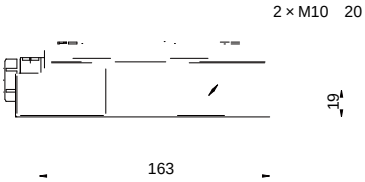
2 × M10
20
19
163

· EHV 18

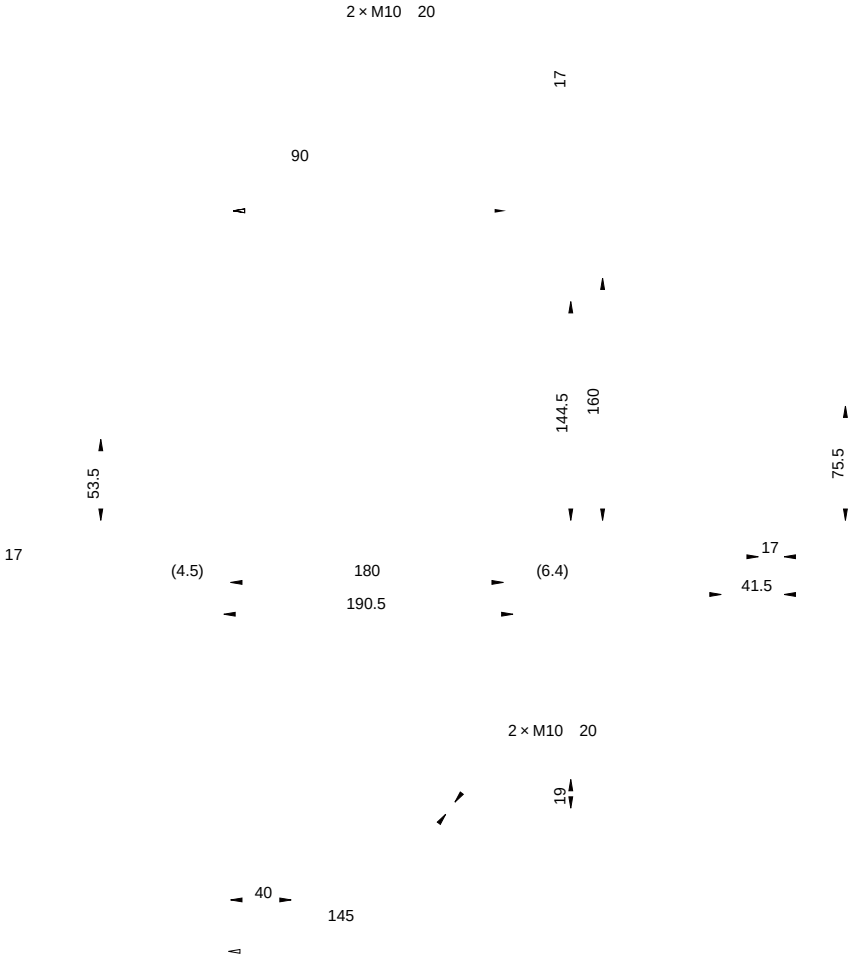
2 × M10 20
17
90
144.5
160
53.5
75.5
17
(4.5)
180
(6.4)
17
41.5
190.5
2 × M10 20
19
40
145

+86 400 101 8889
+01 630 995 3674
+49 (30) 72088-0
+81 03 6809 1696